PRODUCT SHEET

halk A-Board Swing 50 x 70 cm Black

ZPSW50x70

- **Stylish and industrial outdoor black steel chalk A-Board**
- **Share content with a white chalkmarker**
- **Perfect for the hospitality market**
- **NEW: available with imprint**

PRODUCT SHEET

halk A-Board Swing 50 x 70 cm Black

ZPSW50x70

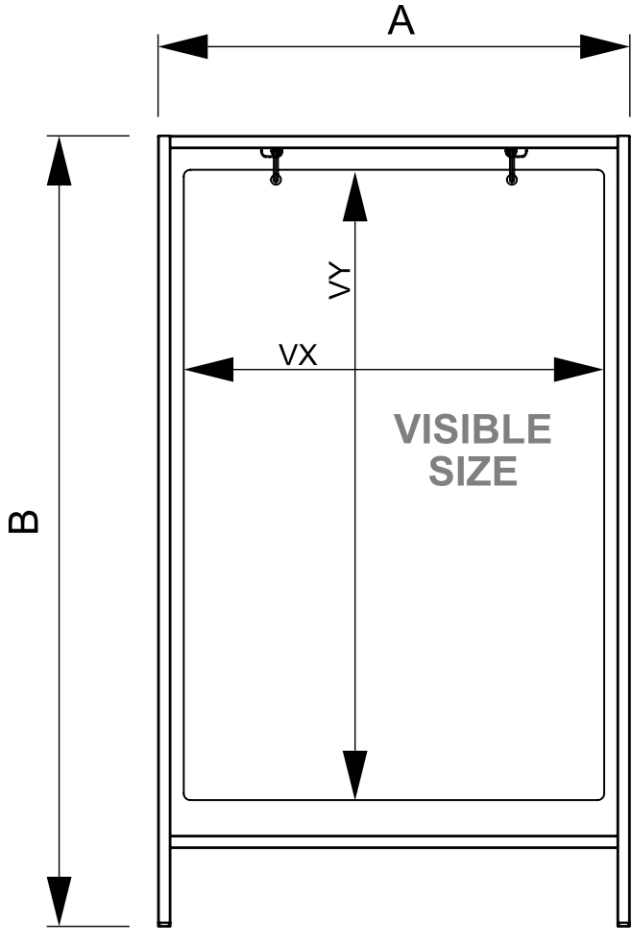

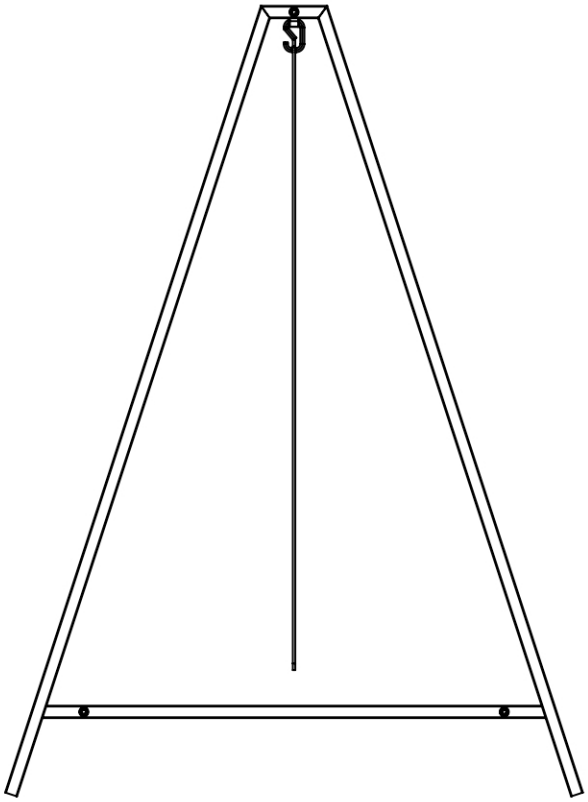

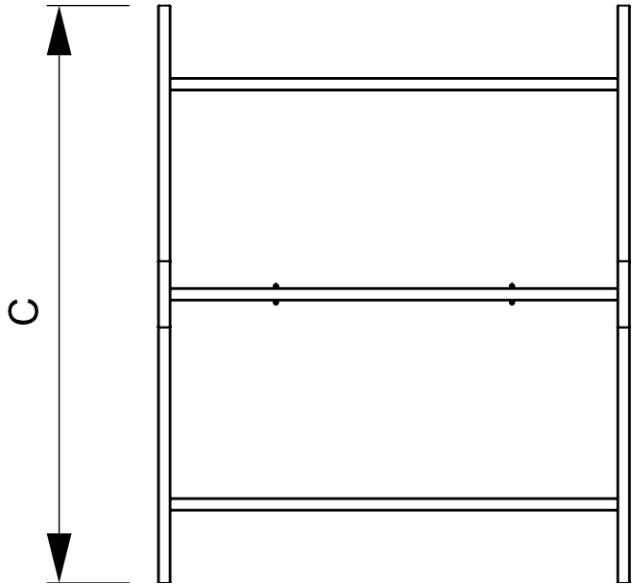

PRODUCT SHEET

halk A-Board Swing 50 x 70 cm Black

ZPSW50x70

GENERAL INFO

SKU	Sizes (mm) (A x B x C)	Format (mm)	Visible size (mm) (VXxVY)	Hole spacing (mm) (XxY)
ZPSW50x70	572 x 955 x 696	508 x 762 mm	508 x 762 mm	-

Orientation	Weight (kg)
Vertical	4,10

PACKAGING INFORMATION

Packaging unit 1 (mm)	Packaging unit 2 (mm)	Packaging unit 3 (mm)
1010 x 740 x 70	-	-

Palette number of pieces	Palette weight (kg)	Palette type
29	201	EUR

ADDITIONAL INFORMATION

Product certifications	EAN
No	8596052169595